US005446637A

United States Patent [19]

Cunningham et al.

[11] **Patent Number: 5,446,637**

[45] **Date of Patent: Aug. 29, 1995**

[54] **LIGHTING FIXTURE**

[76] Inventors: **David W. Cunningham,** 8442 Hollywood Blvd., Los Angeles, Calif. 99069; **Gregory F. Esakoff,** 9131 Santiago Dr., Huntington Beach, Calif. 92646

[21] Appl. No.: **275,626**

[22] Filed: **Jul. 14, 1994**

Related U.S. Application Data

[62] Division of Ser. No. 972,141, Nov. 5, 1992, Pat. No. 5,345,371.

[51] **Int. Cl.**^{6} **F21V 17/02**

[52] **U.S. Cl.** **362/321;** 362/280; 362/285; 362/293; 362/319

[58] **Field of Search** 362/293, 307, 308, 343, 362/297, 346, 309, 202, 285, 288, 289, 321, 319, 280

[56] **References Cited**

U.S. PATENT DOCUMENTS

1,595,533	8/1925	Weems .	
3,662,165	5/1972	Osteen et al.	362/297
3,704,928	12/1972	Coombs et al.	350/1
3,883,733	5/1975	Nagel	240/106.1
3,930,149	12/1975	French	240/41.15
4,187,534	2/1980	Tichenor et al.	362/268
4,240,133	12/1980	Haina et al.	362/293
4,517,630	5/1985	Dieffenbach et al.	362/268
4,519,021	5/1985	Oram	362/277
4,545,000	10/1985	Fraley et al.	362/297
4,609,976	9/1986	Geissler	362/188 X
5,160,192	11/1992	Sugawara	362/16
5,345,371	9/1994	Cunningham et al.	362/297

Primary Examiner—Stephen F. Husar
Attorney, Agent, or Firm—Pretty, Schroeder, Brueggemann & Clark

[57] **ABSTRACT**

An improved lighting fixture is disclosed for imaging a high-intensity beam of light at a distant location. A specially-faceted near-elliptical reflector cooperates with a gate aperture and a single aspheric lens to produce a beam that incorporates a very high proportion of emitted visible light, while the reflector has a dichroic coating that reflects only a low proportion of infrared light. The projected beam thereby has a relatively low energy density, such that the front portion of the fixture can be reduced substantially in size and weight. The gate is selectively rotatable relative to the fixture's rear housing.

7 Claims, 7 Drawing Sheets

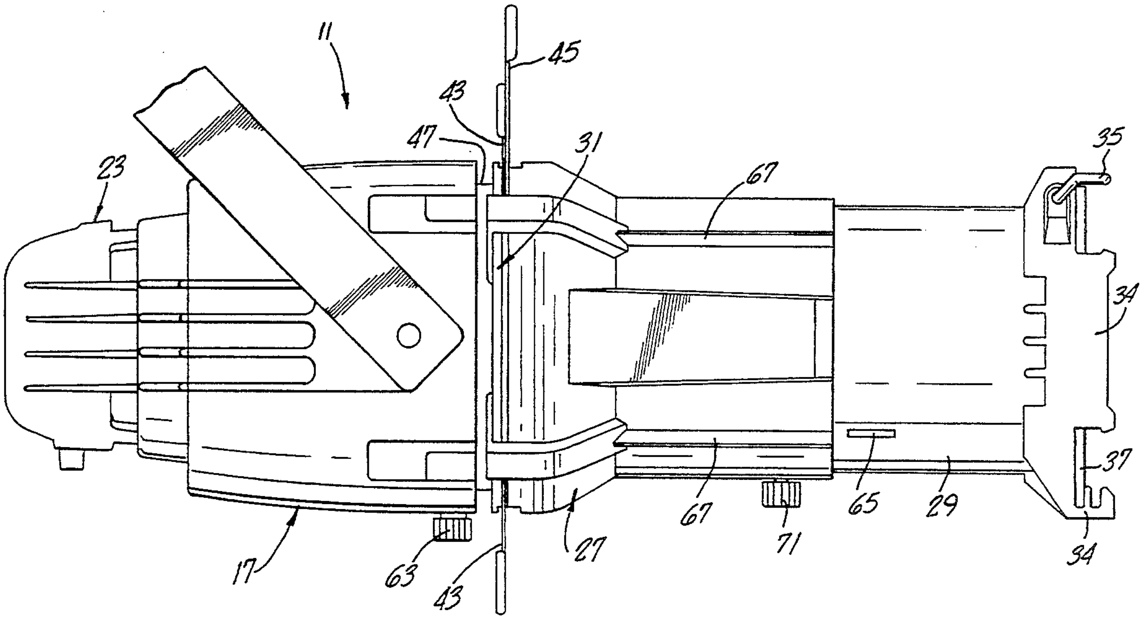

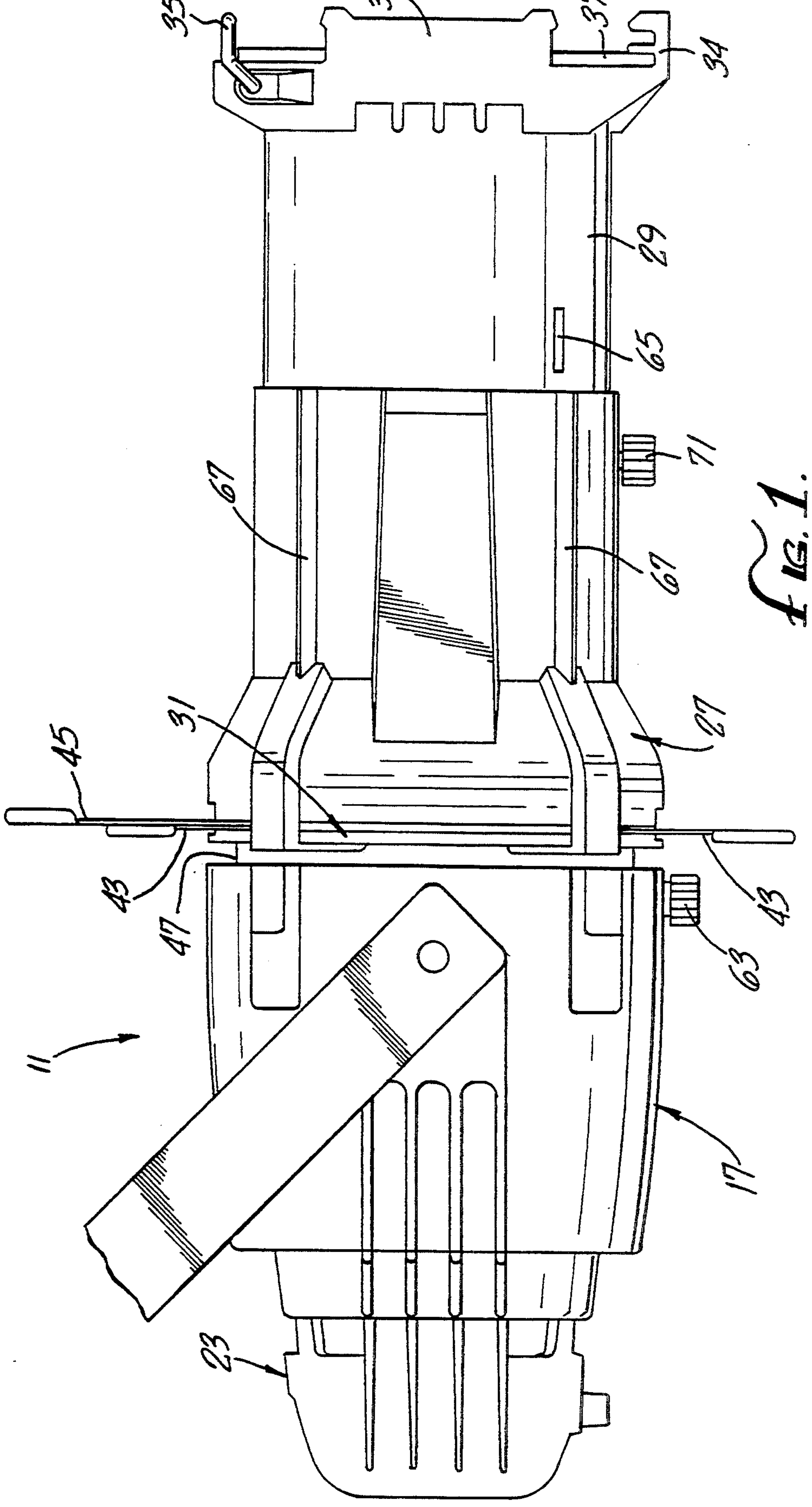

FIG. 1.

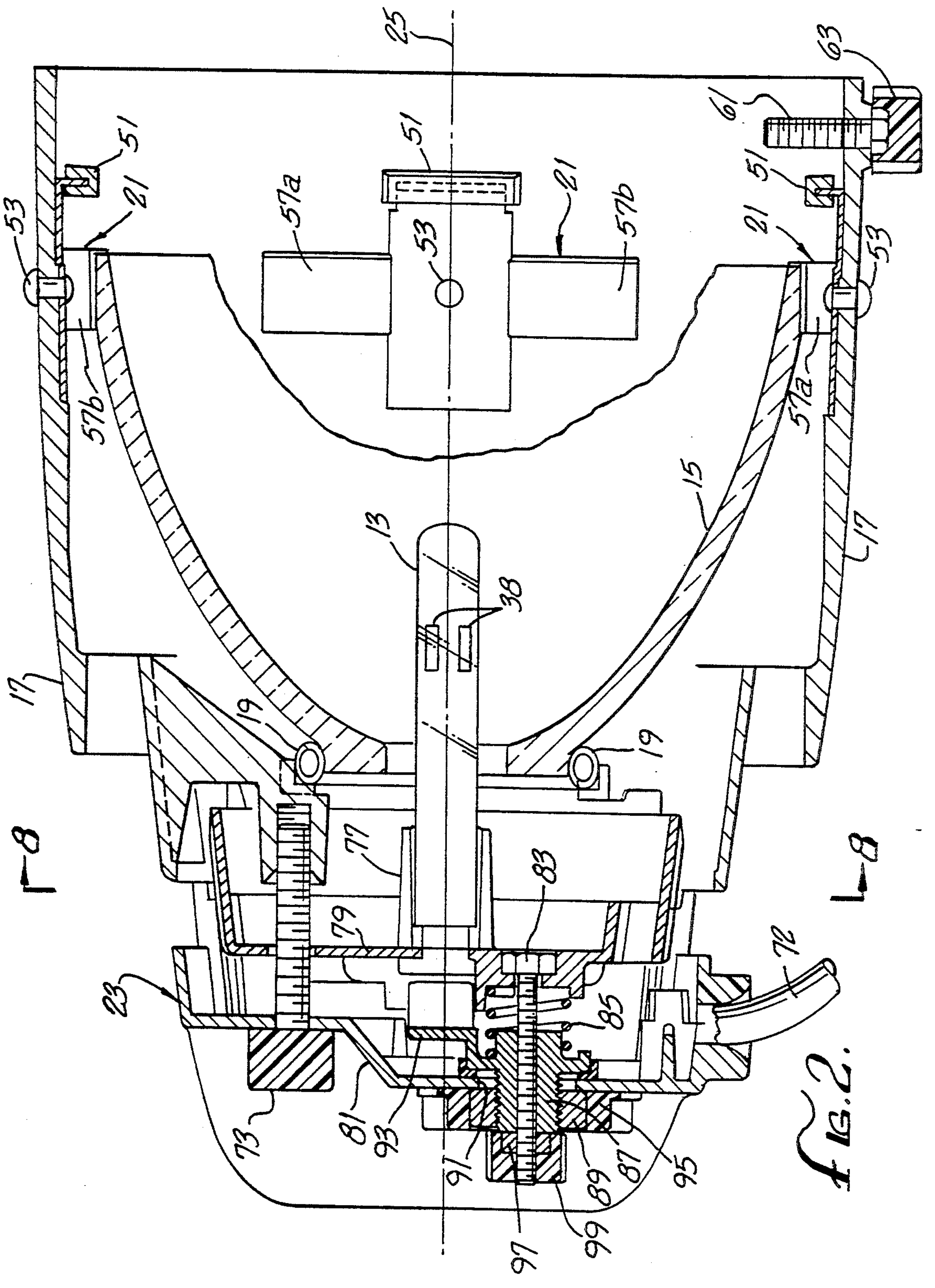
25
63
61
51
51
51
53
53
53
21
21
21
57a
57b
57b
57a
15
17
17
13
38
19
19
8
8
77
83
79
23
85
72
73
81
93
91
97
99
89
87
95

FIG. 2.

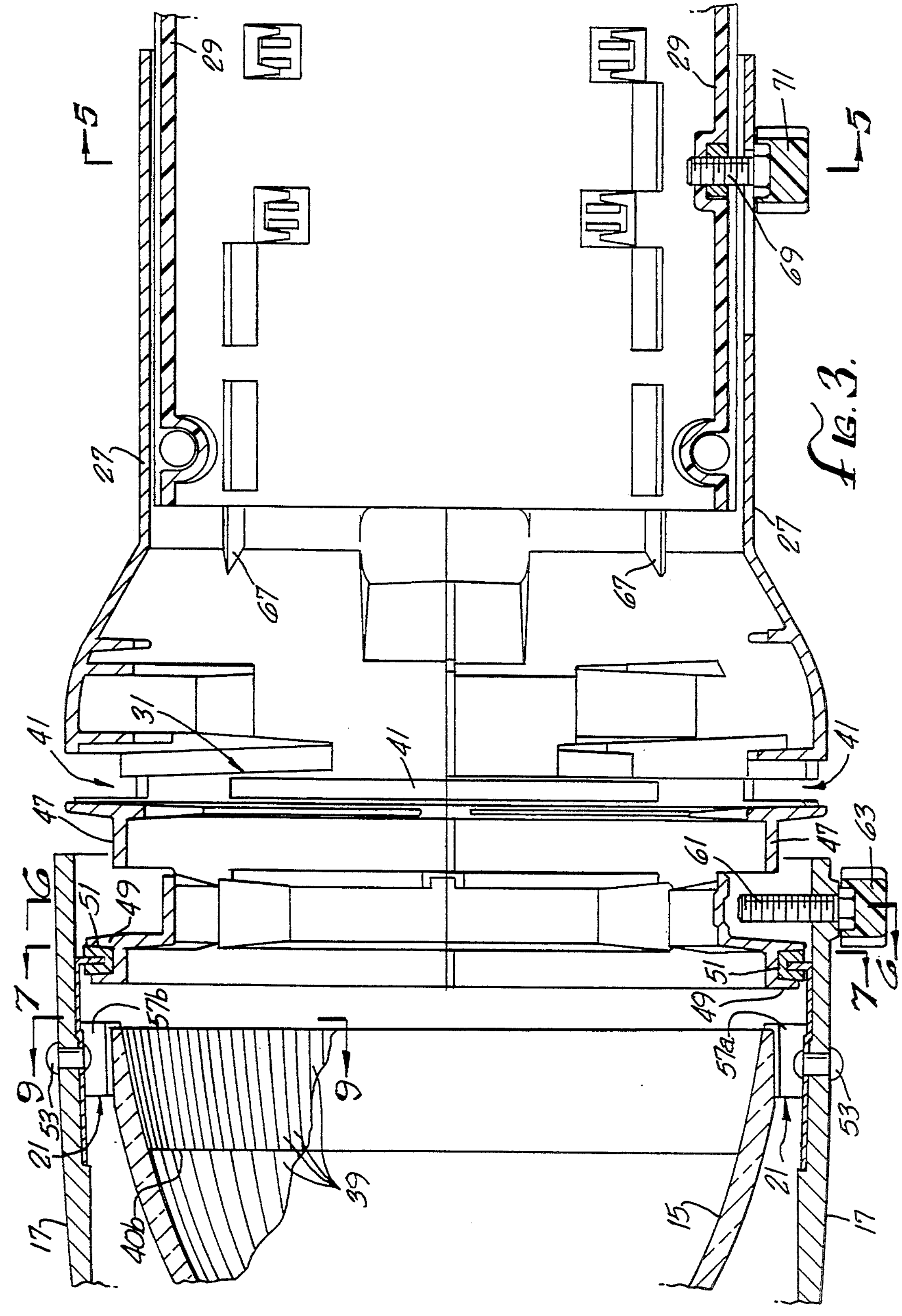
29
29
5
5
71
69
27
27
67
67
41
41
41
31
47
47
61
63
6
6
49
51
51
49
7
7
57b
57a
9
9
53
53
21
21
17
17
40b
39
15

FIG. 3.

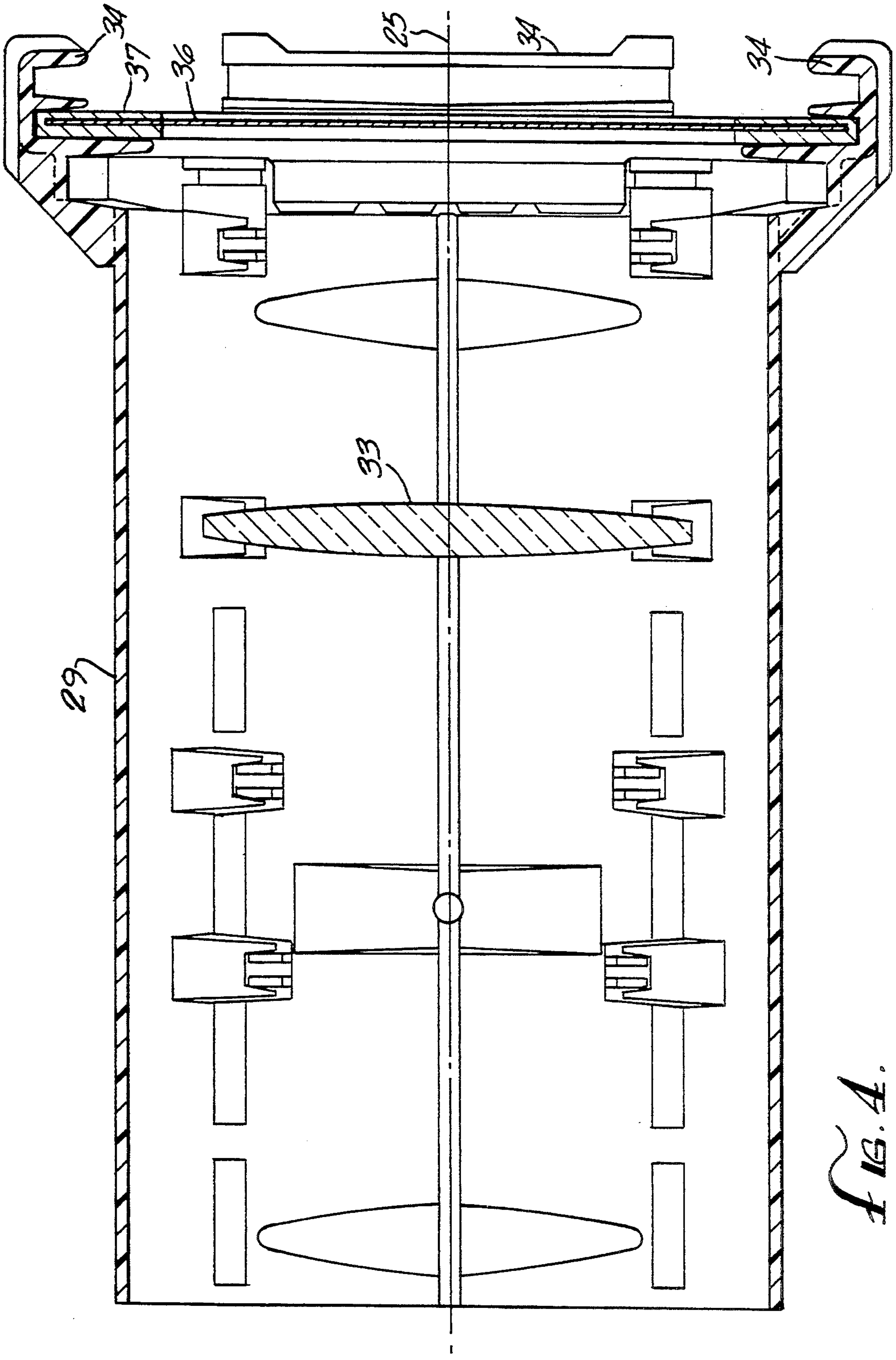

FIG. 4.

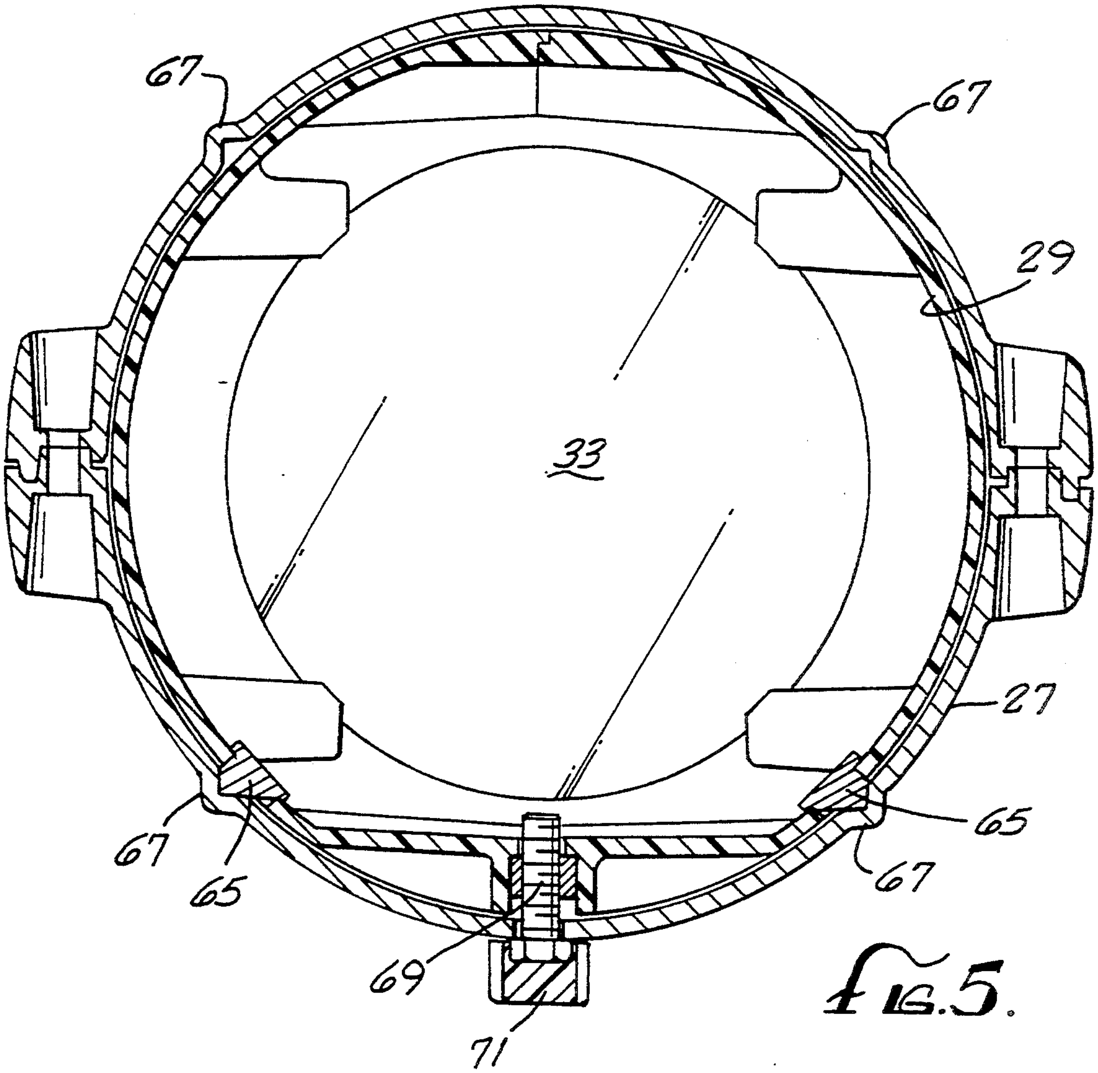

Fig. 5.

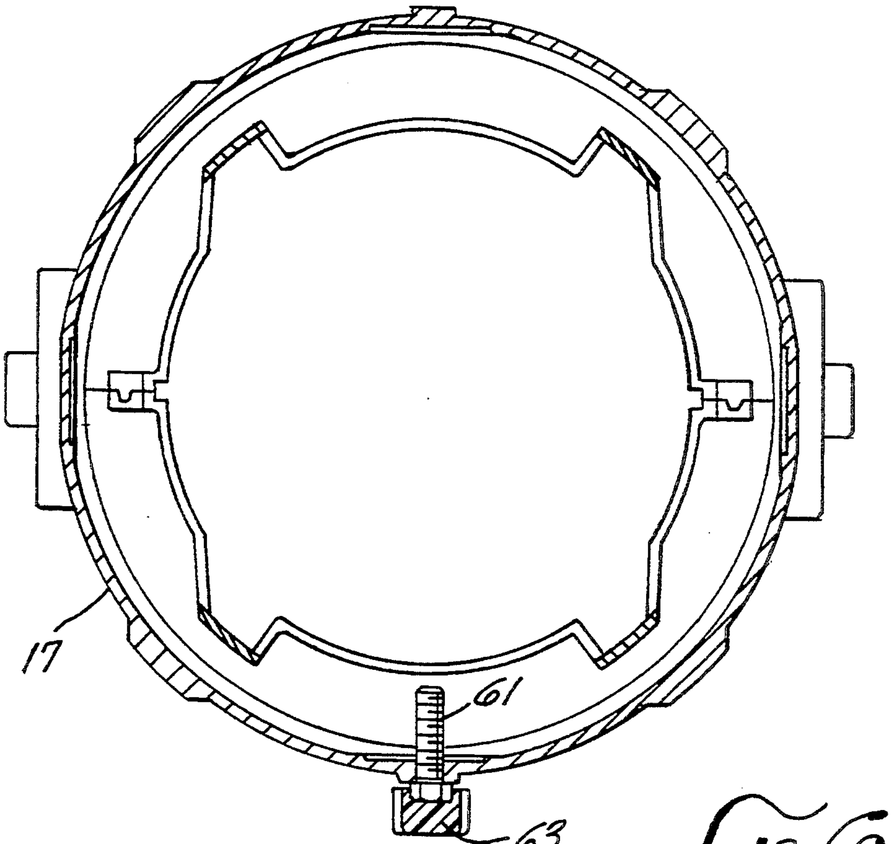

FIG. 6.

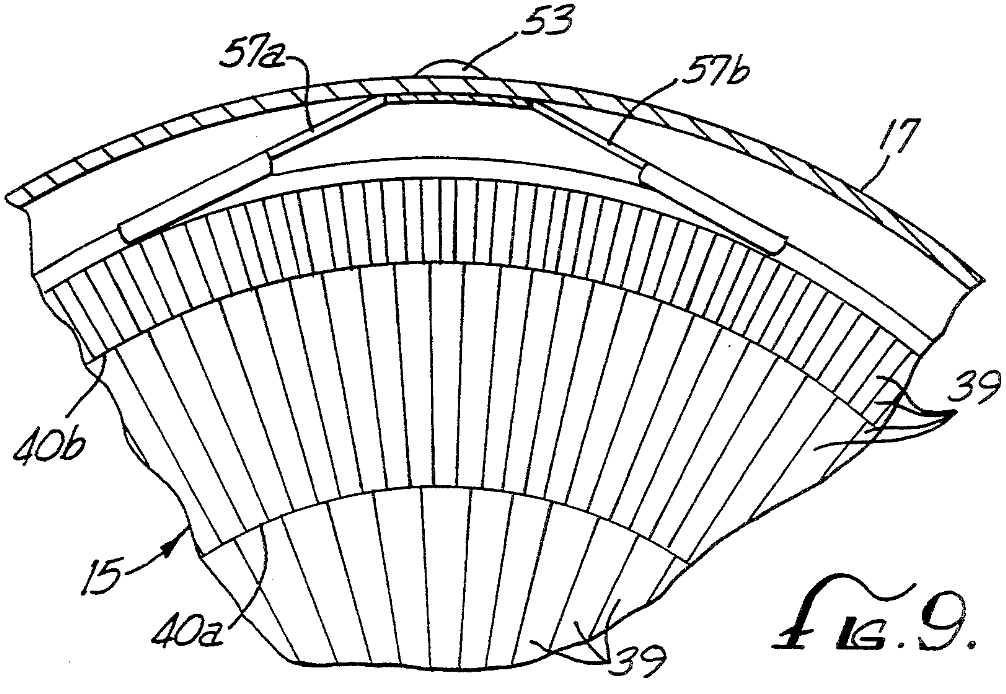

FIG. 9.

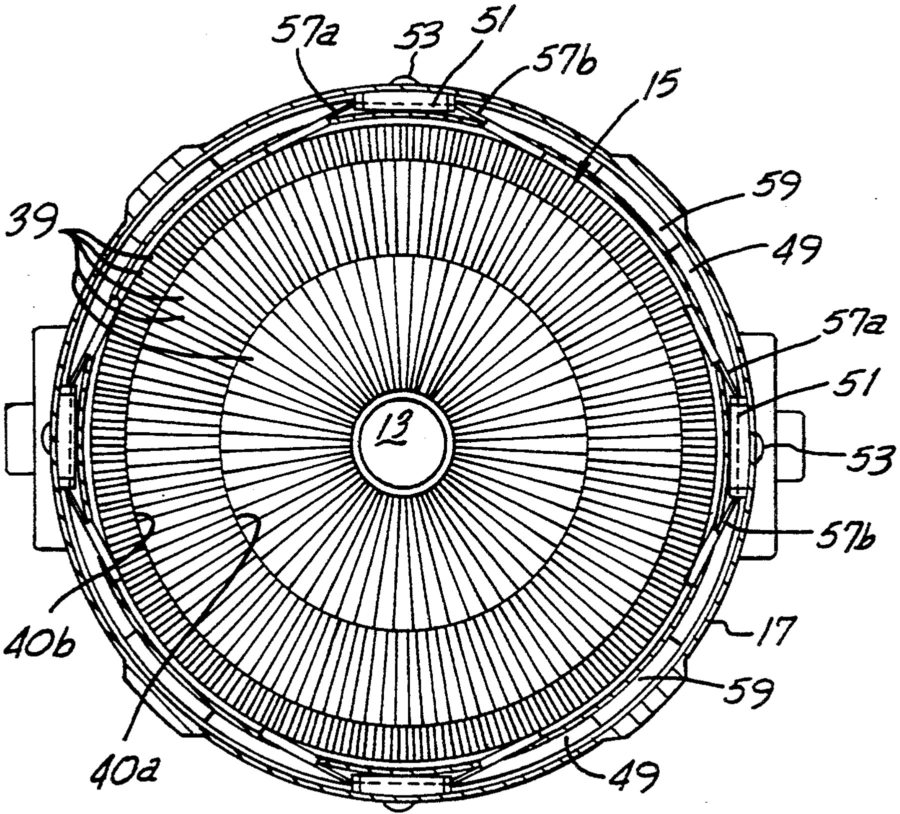

FIG. 7.

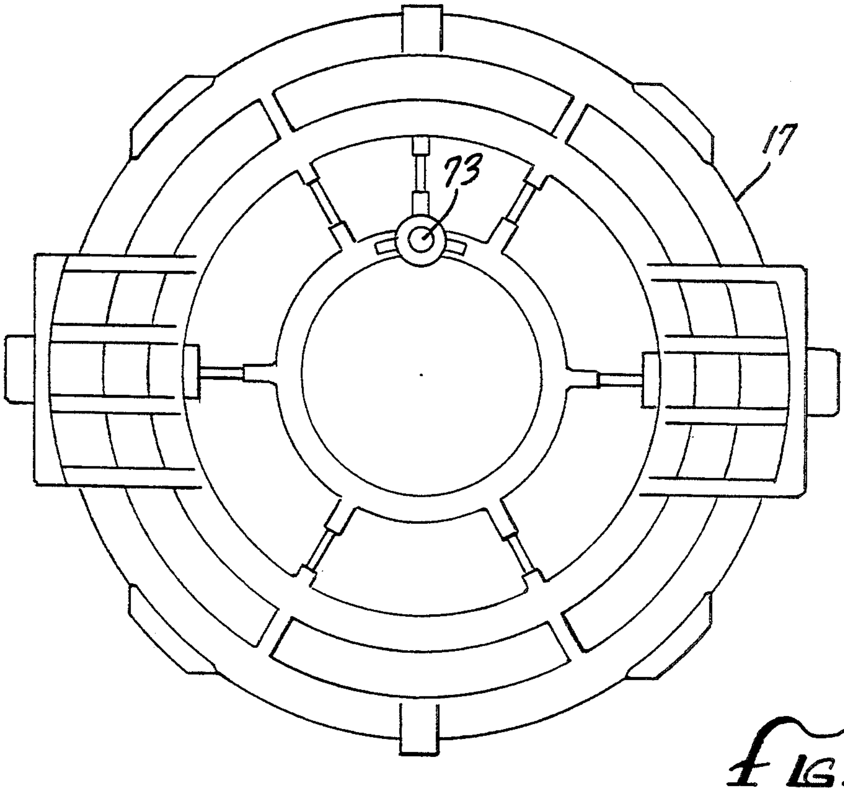

FIG. 8.

LIGHTING FIXTURE

This is a division of application Ser. No. 07/972,141, filed Nov. 5, 1992, and now U.S. Pat. No. 5,345,371.

BACKGROUND OF THE INVENTION

This invention relates generally to lighting fixtures and, more particularly, to lighting fixtures adapted to image a high-intensity beam of light at a distant location.

Lighting fixtures of this particular kind are commonly used in theater, television and architectural lighting applications. Many such fixtures include an ellipsoidal or near-ellipsoidal reflector with a single lamp located generally coincident with the reflector's longitudinal axis. The reflector has two general focal regions, and the lamp is positioned generally with its filaments located at or near one of those focal regions such that light emitted from the filaments is reflected by the reflector generally toward the second focal region. A gate aperture is located at that second focal region, and shutters, patterns and the like can be used at that gate for shaping the projected beam of light. A lens located beyond the gate images light passing through the gate aperture at a distant location.

One problem commonly encountered by lighting fixtures of this kind is that an excessive amount of light emitted by the lamp is not incorporated into the projected beam, but instead is misdirected and absorbed by the shutters, patterns, gate and other internal components of the fixture. This wastes electrical energy and leads to undesired heating of the fixture. In many instances, the shutters and patterns can be warped by the excessive heat and therefore need to be frequently replaced.

Another problem encountered in lighting fixtures of this kind is that the imaged light beam can sometimes have an intensity that varies radially such that a concentric ring pattern is provided. This undesired concentric ring pattern occurs because of the particular kind of filament used in the lamp, e.g., a coiled coil. Each point on the reflector reflects light toward the gate so as to produce a magnified image of the filament, and the superposition of the images resulting from all points on the reflector sometimes can provide the concentric ring pattern.

This undesired concentric ring pattern has been overcome by providing the reflector with a plurality of small, trapezoidal facets, typically flat sections, that function to blur the projected image. The facets have edges that are arranged both radially and circumferentially. Although such a reflector structure is generally effective in eliminating the concentric ring effect, it is believed that this solution misdirects an excessive amount of light so as not to be incorporated into the projected beam.

Another drawback to lighting fixtures of the kind described above is that the fixture projects an undesired amount of infrared light along with the desired visible light. This unduly heats the area on which the projected light is imaged, which in the case of theater, television and some architectural lighting can lead to substantial discomfort. Reflecting undesired infrared light also leads to undesired heating of the pattern and shutters located at the gate and of any colored media or gels located forwardly of the lens. In some cases, highly absorptive media, such as blue gels, burn out very quickly or cannot be used at all.

It should therefore be appreciated that there is a need for an improved lighting fixture that images a beam of light at a distant location, yet that is not unduly wasteful of energy and that does not unduly transmit undesired infrared light. The present invention fulfills this need.

SUMMARY OF THE INVENTION

The present invention is embodied in a lighting fixture for use in combination with a lamp in imaging a beam of light at a distant location, while utilizing a substantially greater proportion of visible light emitted by the lamp. At the same time, the fixture images a substantially lower proportion of infrared light emitted by the lamp. A substantially more efficient lighting fixture thereby is provided.

More particularly, the lighting fixture of the invention is especially adapted for use in combination with a lamp having a plurality of elongated filaments with axes arranged substantially uniformly around a central longitudinal axis. The fixture includes a concave reflector having a base at one end and a mouth at the other end, the reflector being substantially circumferentially symmetrical about a longitudinal axis. The fixture further includes means for supporting the lamp at the reflector's base, with the lamp's central longitudinal axis substantially coincident with the reflector's longitudinal axis. The reflector thereby reflects light emitted by the lamp filaments and forms a beam that is imaged at a predetermined location.

In accordance with one feature of the invention, the concave reflector includes a plurality of radially-extending facets arranged substantially uniformly around its circumference, the facets functioning to redirect the light in a way that provides the imaged beam with a desired intensity distribution, while redirecting very little of the light outside the image spot. The facets extend substantially from the reflector's base to its mouth, and each facet is substantially flat in the reflector's circumferential direction, but curved in the reflector's radial direction. In addition, the facets increase in number with increasing distance from the reflector's base. No orthogonal faceting exists along the radially-extending facets, such that radial cross-sections through the reflector are continuously curved.

The concave reflector can take the form of an ellipsoid or near-ellipsoid having generally two focal regions. The lamp is positioned with its filaments located at or near one of those focal regions such that the reflector reflects light emitted from the filaments toward the second focal region. A gate aperture is positioned at the second focal region, for use in defining the peripheral shape of the imaged light beam. A lens positioned beyond the gate images the light at the distant location.

In another feature of the invention, the reflector is constructed of borosilicate glass coated with multiple thin-film layers of a dielectric coating, which has a substantially higher reflectance at visible wavelengths than at infrared wavelengths. This minimizes the amount of projected infrared light and thereby minimizes undesired heating of objects located at the site of the imaged beam. It also limits the amount of radiant energy passing through one or more colored media or gels located forward of the lens, thereby allowing the sizes of those gels, as well as the size of the lens, to be substantially reduced. Minimizing the amount of reflected infrared light also reduces undesired heating of the shutters, patterns and front barrel of the fixture.

In still another feature of the invention, the lens for imaging the projected light includes a single, aspheric lens configured to substantially correct spherical aberration, astigmatism and field curvature in the projected image. Because just a single lens element is required, the total reflection loss occurring at the lens surfaces can be reduced significantly from that occurring in prior fixtures, which typically included two spherical lenses.

In yet another feature of the invention, a shutter/pattern assembly located at the fixture's gate aperture is carried by a front barrel assembly that is selectively rotatable relative to a rear housing for the concave reflector and lamp. This facilitates a convenient shaping of any selected part of the projected beam.

Further, the lamp position is conveniently adjusted relative to the concave reflector using two concentric knobs mounted on a rear assembly that supports the lamp. One knob moves the lamp along the fixture's longitudinal axis, while the other knob, when loosened, allows the lamp's transverse position relative to that axis to be selected. Removing and replacing the lamp assembly from the remainder of the fixture, as for example when replacing a burned-out lamp, does not affect the lamp's position adjustment.

Other features and advantages of the present invention should become apparent from the following description of the preferred embodiment, taken in conjunction with the accompanying drawings, which illustrate, by way of example, the principles of the invention.

BRIEF DESCRIPTION OF THE DRAWINGS

FIG. **1** is a side, elevational view of a lighting fixture embodying the present invention.

FIG. **2** is a side, sectional view of the rear portion of the lighting fixture of FIG. **1**, shown with a lamp being positioned within the fixture's near-ellipsoidal reflector.

FIG. **3** is a side, sectional view of a mid-portion of the lighting fixture of FIG. **1**, showing the mechanism that allows limited rotation of the front barrel and shutter/pattern assembly relative to the rear housing.

FIG. **4** is a top, sectional view of the lens holder portion of the lighting fixture of FIG. **1**, showing the single aspheric lens and a colored gel.

FIG. **5** is a sectional view of the lighting fixture, taken in the direction of the arrows **5—5** in FIG. **3**.

FIG. **6** is a sectional view of the lighting fixture, taken in the direction of the arrows **6—6** in FIG. **3**.

FIG. **7** is a sectional view of the lighting fixture, taken in the direction of the arrows **7—7** in FIG. **3**.

FIG. **8** is a sectional view of the lighting fixture, taken in the direction of the arrows **8—8** in FIG. **2**.

FIG. **9** is a section, of view of the lighting fixture, taken in the direction of the arrows **9—9** in FIG. **3**.

DESCRIPTION OF THE PREFERRED EMBODIMENT

With reference now to the drawings, and particularly to FIGS. **1** and **2**, there is shown a lighting fixture for use in combination with a lamp **13** in projecting an intense beam of light for imaging at a distant location. The lighting fixture is particularly adapted for use in theater, television and architectural lighting applications. The fixture includes a near-ellipsoidal reflector **15** located within a generally cylindrical rear housing **17**. The reflector is secured to the housing at the reflector's base by an assembly that includes a coil spring **19** and at the reflector's mouth by four spring clips **21** (FIGS. **2**, **7** and **9**) positioned uniformly around the housing's inner periphery. A lamp receptacle or burner assembly generally designated by the reference numeral **23** is secured to the rear of the housing and supports the lamp **13** in a selected coaxial position within the reflector. In particular, the lamp is positioned with its central longitudinal axis substantially coincident with a central longitudinal axis **25** of the reflector. One suitable lamp for use in the lighting fixture of the invention is disclosed in copending and commonly-assigned application for U.S. patent, Ser. No. 07/724,841, filed Jul. 7, 1991 and entitled "Incandescent Illumination System."

With reference now to FIGS. **1**–**4** here is shown are a generally cylindrical front barrel **27** and a lens tube **29** secured to the forward end of the housing **17**. The front barrel carries at its rearward end a gate assembly **31**, and the lens tube carries a lens **33** (FIG. **4**) at one of several factory-selected locations along its length and further includes guides **34** and a pivotable retainer **35** for carrying one or more colored media **36** in a media frame **37** at its forward end. Light emitted by filaments **38** of the lamp **13** is reflected by the reflector **15** through the gate to the lens, which forms a generally collimated beam that is projected through the media and away from the fixture. The different lenses and factory-selected lens positions allow for selection of the projected beam's field angle.

The near-ellipsoidal reflector **15** is configured such that, by positioning the lamp **13** with its filaments **38** substantially coincident with a rough focal region of the reflector, substantially all points on the reflector reflect emitted light through the gate aperture **31** toward the lens **33**. The gate aperture is located approximately at a second rough focal region of the reflector. Each point on the reflector produces at the gate an image of the lamp filaments, as those filaments appear from that point on the reflector. The filament image is magnified by a factor corresponding to the ratio of the distance from the point on the reflector to the gate divided by the distance from the point on the reflector to the filaments.

The filament images produced at the gate **31** by the entire collection of points on the reflector **15** combine to reinforce each other and form a composite image. The lens **33** then functions to project this very same image at a distant location, such as a theater stage. This is achieved by selectively positioning the lens forward of the gate by a distance corresponding generally to the lens' focal length.

The composite image produced at the gate **31** and thus imaged by the lens **33** at a distant location generally can have an undesired non-uniform intensity distribution. Localized regions of high intensity, or hot spots, can occur wherever the filament images produced by elemental areas on the reflector **15** reinforce each other. In the past, this undesirable characteristic was sought to be eliminated by providing the reflector with a plurality of small, flat, trapezoidal facets across its surface. This tended to provide a more desirable intensity distribution, but at the expense of redirecting an excessive amount of light in directions other than through the gate aperture and lens. This led to undue inefficiency and excessive heating of the lighting fixtures.

In the lighting fixture **11** of the invention, the desired light intensity distribution is achieved by configuring the reflector **15** to be faceted, but only in a circumferential direction. This faceting is depicted in FIGS. **3** and **7**. Each facet **39** is substantially flat in a circumferential direction, but follows a generally elliptical curve in a radial direction.

The number of facets **39** increases with increasing radial distance. This increase occurs in two discrete steps identified by the reference numerals **40***a* and **40***b*. Each step represents a doubling in the number of facets. The site of each such step and the circumferential angle of each facet are selected empirically, to provide a desired integrated intensity distribution that is circumferentially uniform.

The effect of each facet **39** is to blur the image of the lamp filaments formed at the gate **31**. Because the facets are arranged only circumferentially, this blurring occurs only in directions generally perpendicular to the facet's radial orientation. This has the effect of blurring the regions of high light intensity, but keeping substantially all of the light within the limits of the gate and lens. A substantially circumferentially uniform light intensity across the gate aperture thereby is provided, with minimal wastage of light missing the gate aperture and the lens **33**, relative to prior faceting.

In another feature of the invention, the reflector **15** has a dichroic characteristic, reflecting a very high proportion of visible light, while transmitting a very high proportion of infrared light. The reflector is formed of molded borosilicate glass, with a special, multiple-layer, thin-film dielectric coating. In the preferred embodiment, this coating constitutes fifteen or more alternating layers of silicon dioxide and titanium oxide or tantalum oxide. Each such layer has a thickness substantially less than the wavelength of visible light.

Configuring the reflector **15** to be dichroic, as described above, ensures that a much higher proportion of the projected light is in the visible spectrum, and thus useful. Only about 10% of the emitted infrared light, which would serve only to heat the objects being illuminated without at the same time providing any visible illumination, is projected. Moreover, the dichroic glass reflector reflects about 95% of visible light, which is substantially higher than prior polished aluminum reflectors.

In addition, reducing the amount of forwardly-directed infrared light reduces correspondingly the undesired heating of the fixture's front barrel **27** and lens tube **29**, including the shutter/pattern assembly **31**, lens **33**, and colored media **36**. This, in turn, allows those components to be made smaller, and thus lighter and less expensive to manufacture, without bringing about an excessively high energy density.

The lens **33** located within the lens tube **29** receives light reflected by the reflector **15** through the shutter/pattern assembly **31** and images that light at a distant location. The lens preferably is configured to be a single aspheric lens, which substantially corrects spherical aberration, astigmatism, and field curvature in the projected beam. This has several advantages over prior lens systems that included multiple plano-convex lenses with one spherical surface each. Because just a single lens is included, reflection losses are dramatically reduced and efficiency therefore is increased. Since a 4 percent reflection loss typically occurs at each lens surface, the elimination of one lens leads to an 8 percent gain in efficiency. Further, using just a single lens reduces the fixture's overall weight, reduces the cost of applying anti-reflection coatings, and facilitates cleaning of the lens during use, since both sides of the lens are readily accessible. Although aspheric lenses generally are substantially more expensive than spherical lenses, it is a cost-effective alternative in this case, because of the resulting substantial increase in the fixture's efficiency and because the smaller lens size (resulting from use of the dichroic reflector **15**) dramatically reduces the aspheric lens' manufacturing cost.

Reducing the amount of forwardly-directed infrared light also facilitates a better use of colored media **36**. Overheating, and thus burning, of the media can be eliminated. Even highly-absorptive blue media can be used without fear of their being damaged. In addition, the reduction in the media size leads to yet a further cost savings.

As previously mentioned, the shutter/pattern assembly **31** is located at the rearward end of the front barrel **27**, which is substantially at the second focal region of the near-ellipsoidal reflector **15**. The projected beam's cross-section can be shaped at this location, and that same shape is then imaged at the distant location. To facilitate this shaping, four circumferentially-oriented slots **41** (three shown in FIG. **3**) are formed in the front barrel and sized to slidably receive four shutters **43** (FIG. **1**) configured to be selectively slidable into the path of the beam being projected. One of the slots **41** is sized also to slidably receive a pattern **45** (FIG. **1**) configured to be selectively slidable into the path of the beam.

In the past, the ability to shape selected portions of the beam being projected was limited, because shutters typically were insertable into the beam's path from only four angularly fixed positions, except on very expensive and sophisticated fixtures. Although the shutters could each be tilted and rotated to a limited extent, they could not be tilted sufficiently to allow complete freedom in the shaping of the projected beam. In the fixture **11** of the invention, however, this drawback is overcome by configuring the front barrel **27** to be selectively rotatable by ±25 degrees relative to the rear housing **17**.

Rotation of the front barrel **27** relative to the rear housing **17** is accomplished by means of a cylindrical extension **47** projecting rearwardly from the barrel and sized to slidably fit within the forward part of the rear housing. The rearward end of this cylindrical extension includes an outwardly-directed annular channel **49** extending completely around its periphery. This channel is sized to receive four runners **51** secured within the rear housing, at locations spaced circumferentially 90° apart.

More particularly, the runners **51** are secured to the spring clips **21** that are used to secure the mouth end of the reflector **15** to the rear housing **17**. These spring clips are each secured to the rear housing by a rivet **53**. Two spring-biased arms **57***a* and **57***b* (FIGS. **2**, **7** and **9**) project inwardly from each clip, to engage the mouth end of the reflector and thereby hold the reflector centered within the housing. These arms absorb physical shocks and thereby prevent damage to the glass reflector from normal rough handling. For use in installing the front barrel housing, four openings **59** are formed in the rearward side wall of the channel **49**, to allow the front barrel **27** to be slid rearwardly within the rear housing until the four runners are received within the channel. Thereafter, the front barrel may be rotated freely ±25 degrees relative to the rear housing, with the four projections sliding within the channel and thereby maintaining the front barrel axially fixed relative to the rear housing. This front barrel rotatability allows the shutters **43** and pattern **45** to be positioned at a selected circumferential location relative to the beam.

A set screw **61** can be positioned to limit free rotation of the front barrel **27** relative to the rear housing **17**, so as to prevent it from rotating to an orientation where the runners **51** are aligned with the channel openings **59**, in which case the front barrel could fall by gravity from the housing. Complete removal of the set screw is required to allow the front barrel to be rotated to its removal position. An enlarged head **63** on the set screw allows this rotational adjustment to be performed conveniently by hand, without the need for any special tools.

As best shown in FIGS. **3** and **5**, the front barrel **27** and lens tube **29** are configured to be telescopically slidable relative to each other. This enables the lens **33** to be selectively positioned relative to the gate **31**, so as to image the beam at a selected range. Elongated Teflon guides **65** secured to the outer side of the lens tube are received within correspondingly shaped V tracks **67** in the inner side of the front barrel. The guides and tracks are oriented longitudinally, to allow the lens tube to be slid manually to a selected longitudinal position relative to the front barrel. A set screw **69** with an enlarged head **71** for manual gripping can be tightened to lock the lens tube in its selected position.

As previously mentioned, and with reference again to FIGS. **2** and **9**, the reflector is supported within the housing **17** by a coil spring **19** and four spring clips **21**. This spring mounting allows for differential thermal expansion and also provides limited shock absorption for the reflector.

Provision for an annular space encircling the reflector **15** and numerous ventilation openings in the rear housing **17**, burner assembly **23**, and front barrel **27** ensure that the lighting fixture is adequately cooled. A power cable **72** supplies power to the lamp **13**.

With reference again to FIG. **2**, the burner assembly **23** that supports the lamp **13** is secured to the rear portion of the rear housing **17** by means of a single screw **73**. An enlarged screw head enables the screw to be tightened and released manually. The lamp itself is held by a socket **77** that is secured to a floating plate **79** that is positioned forwardly of a rear plate **81** of the burner assembly. A bolt **83** projects rearwardly from the floating plate, for use in controllably positioning the floating plate and, thereby, the socket and the lamp. Encircling the threaded shaft of the bolt are, successfully, a compression spring **85**, an externally-threaded sleeve **87**, and a nut **89** threaded to the sleeve. The sleeve projects through an opening **91** in the burner assembly's rear plate **81**, and the rear plate is captured between the nut **89** and a lateral extension **93** of the sleeve. The lateral extension **93** is received in a correspondingly shaped recess of the base floating **79**, to prevent relative rotation. An enlarged cap **95** for the nut **89** provides a knob that enables the nut to be tightened and untightened manually. When the nut is untightened, the nut, sleeve and bolt are free to be moved a limited distance in any direction transverse to the lamp's longitudinal axis. Tightening the nut then fixes the selected transverse position.

Threaded to a portion of the threaded shaft of the bolt **83** projecting rearwardly from the sleeve **87** is a nut **97** with an enlarged cap **99**. Rotation of this nut moves the head of the bolt **83** axially, Under the bias of the compression spring **85**, to position the floating plate **79** axially relative to the housing **17**. This, in turn, positions the filaments **38** of the lamp **13** axially relative to the reflector **15**.

Thus, the precise physical position of the lamp **13** and its filaments **38** relative to the reflector **15** can be conveniently adjusted using two concentrically-arranged knobs **95** and **99**. In addition, this adjustment is not disturbed by a removal of the burner assembly **23** by means of the screw **73**.

It should be appreciated from the foregoing description that the present invention provides an improved lighting fixture for use with a lamp in imaging a high-intensity beam of light at a distant location. A near-elliptical reflector reflects a high proportion of visible light emitted by the lamp through a gate aperture and, in turn, through a lens to produce the beam being projected. The reflector includes elongated, radially-oriented facets for blurring the projected light so as to provide a desired intensity distribution for the beam, with minimal misdirected light. Further, the reflector has a dichroic coating that reflects very little infrared light, whereby the projected beam's energy density is minimized. The gate is rotatable relative to the fixture's rear housing, whereby the projected beam's shape can conveniently be controlled using a conventional shutter.

Although the invention has been described in detail with reference to the presently preferred embodiment, those of ordinary skill will appreciate that various modifications can be made without departing from the invention. Accordingly, the invention is defined with reference only to the following claims.

We claim:

1. A lighting fixture for theater, television, or architectural lighting applications, the lighting fixture configured for use with a lamp to image a beam of light at a distant location, comprising:

a substantially ellipsoidal reflector having a base at one end and a mouth at the other end and further having a first focal region near the base and a second focal region beyond the mouth, a longitudinal axis thereby being defined;

a housing for supporting the reflector;

means for supporting the lamp adjacent the base of the reflector, with one or more filaments of the lamp located substantially coincident with the first focal region of the reflector, wherein light emitted by the lamp is reflected by the reflector toward the second focal region of the reflector;

a support bracket for supporting the lighting fixture;

a power cable for supplying electrical power to the lamp from an external power source;

one or more shutters or patterns located substantially at the second focal region of the reflector and selectively slidable into the path of light reflected thereto;

a generally cylindrical lens tube having a longitudinal axis, the lens tube being secured to the housing with the longitudinal axis of the lens tube substantially aligned with the longitudinal axis of the reflector; and

a lens mounted at a selected location within the lens tube, for imaging the reflected light at a distant location, wherein the lens is a single aspheric lens that substantially corrects spherical and chromatic aberrations, astigmatism, and field curvature in the projected beam;

wherein the lens tube is configured to be controllably movable along its longitudinal axis, to position the lens a selected distance from the second focal region of the reflector and thereby to controllably adjust the distance at which the light projected by the lens is imaged.

2. A lighting fixture as defined in claim **1**, wherein the substantially ellipsoidal reflector has a reflective surface configured to be dichroic, having a substantially higher reflectance at visible wavelengths than at infrared wavelengths.

3. A lighting fixture as defined in claim **2**, wherein:

the substantially ellipsoidal reflector includes a glass substrate and a multi-layer, thin-film reflective coating; and

the lighting fixture further includes a rear housing and spring-biased reflector mounting means for engaging the reflector at its base and its mouth, to secure the reflector within the housing.

4. A lighting fixture as defined in claim **1**, wherein the means for supporting the lamp includes:

a rear plate;

means for securing the rear plate to the housing;

a socket for holding the lamp;

manually-operable transverse adjustment means for selectively positioning the socket transversely of the reflector's longitudinal axis without affecting the socket's axial position; and

manually-operable axial adjustment means for selectively positioning the socket axially relative to the reflector's longitudinal axis without affecting the socket's transverse position;

wherein operation of the means for securing does not affect the transverse and axial adjustment means.

5. A lighting fixture as defined in claim **1**, wherein:

the lamp with which the lighting fixture is suitable for use has a plurality of elongated filaments with longitudinal axes arranged substantially uniformly around a central longitudinal axis;

the means for supporting the lamp includes means for supporting the lamp with the lamp's central longitudinal axis substantially coincident with the reflector's longitudinal axis; and

the substantially ellipsoidal reflector includes a plurality of facets arranged substantially uniformly around its circumference, each facet being substantially flat circumferentially, but curved radially.

6. A lighting fixture for use in combination with a lamp to image a beam of light at a distant location, comprising:

a substantially ellipsoidal reflector having a base at one end and a mouth at the other end and further having a first focal region near the base and a second focal region beyond the mouth, a longitudinal axis thereby being defined, wherein the reflector includes a glass substrate and a multi-layer, thin-film reflective coating configured to be dichroic, having a substantially higher reflectance at visible wavelengths than at infrared wavelengths;

a rear housing and spring-biased reflector mounting means for engaging the reflector at its base and its mouth, to secure the reflector within the housing;

means for supporting the lamp adjacent the base of the reflector, with one or more filaments of the lamp located substantially coincident with the first focal region of the reflector, wherein light emitted by the lamp is reflected by the reflector toward the second focal region of the reflector;

a generally cylindrical lens tube having a longitudinal axis, the lens tube being secured to the housing with the longitudinal axis of the lens tube substantially aligned with the longitudinal axis of the reflector; and

a lens mounted at a selected location within the lens tube, for imaging the reflected light at a distant location, wherein the lens is a single aspheric lens that substantially corrects spherical and chromatic aberrations, astigmatism, and field curvature in the projected beam.

7. A lighting fixture for use in combination with a lamp to image a beam of light at a distant location, comprising:

a substantially ellipsoidal reflector having a base at one end and a mouth at the other end and further having a first focal region near the base and a second focal region beyond the mouth, a longitudinal axis thereby being defined;

a rear housing for supporting the reflector;

means for supporting the lamp adjacent the base of the reflector, with one or more filaments of the lamp located substantially coincident with the first focal region of the reflector, wherein light emitted by the lamp is reflected by the reflector toward the second focal region of the reflector and, wherein the means for supporting lamp includes

a rear plate,

means for securing the rear plate to the rear housing,

a socket for holding the lamp,

manually operable transverse adjustment means for selectively positioning the socket transversely of the reflector's longitudinal axis without affecting the socket's axial position, and

manually operable axial adjustment means for selectively positioning the socket axially relative to the reflector's longitudinal axis without affecting the socket's transverse position,

wherein operation of the means for securing does not affect the transverse and axial adjustment means;

a generally cylindrical lens tube having a longitudinal axis, the lens tube being secured to the housing with the longitudinal axis of the lens tube substantially aligned with the longitudinal axis of the reflector; and

a lens mounted at a selected location within the lens tube, for imaging the reflected light at a distant location, wherein the lens is a single aspheric lens that substantially corrects spherical and chromatic aberrations, astigmatism, and field curvature in the projected beam.

* * * * *